Sanovo

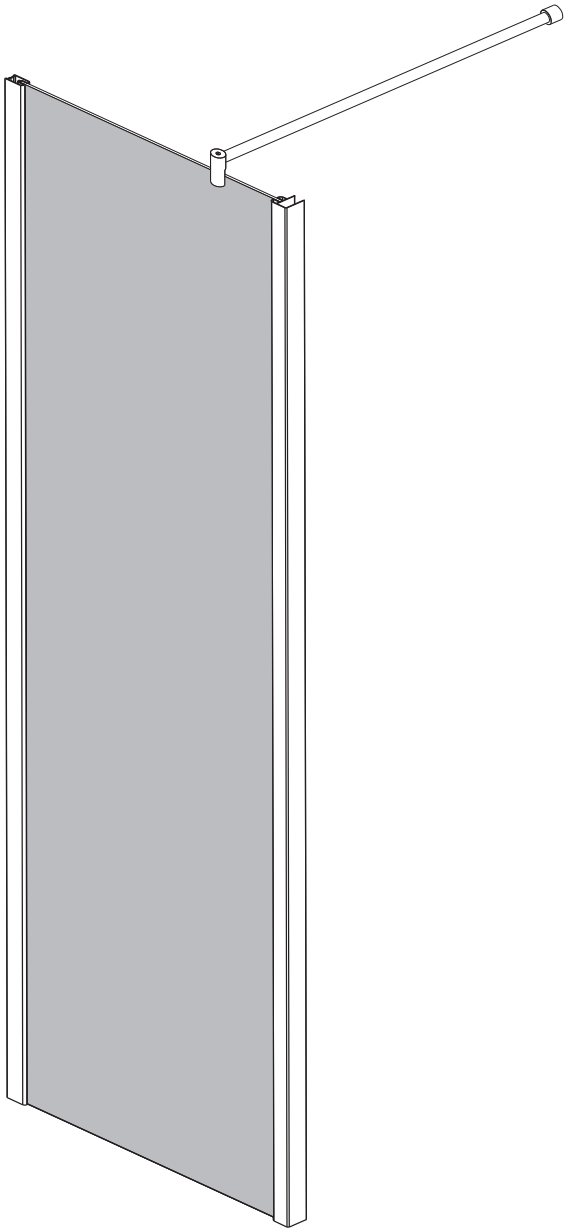

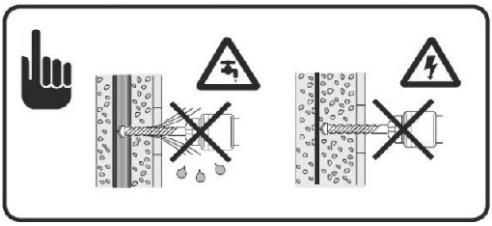

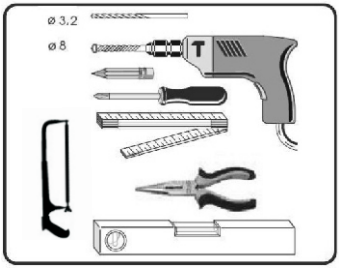

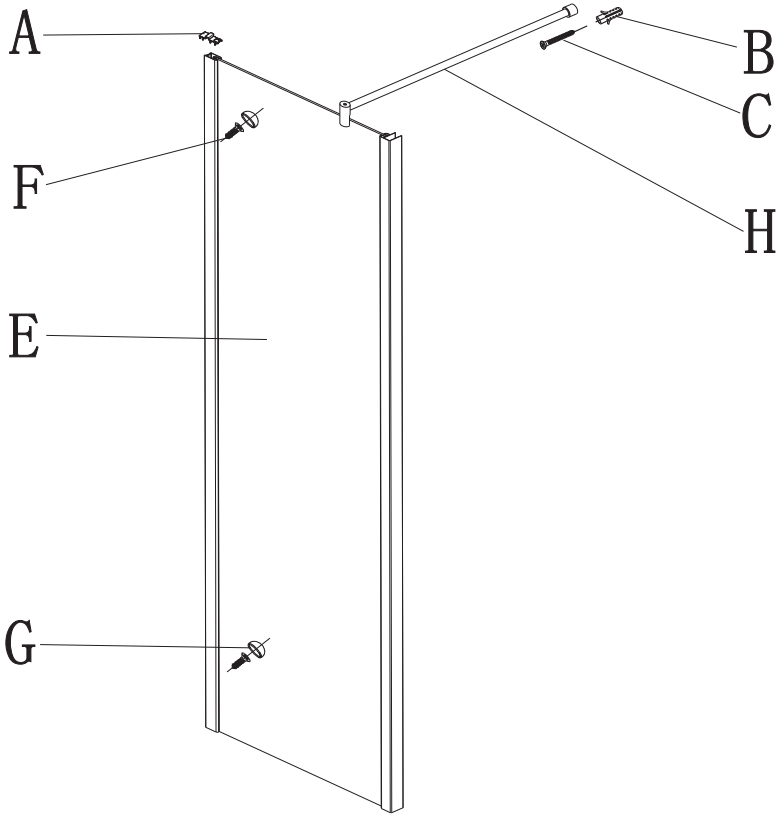

A *1	B *1+1	C *1+1	D *1	E *1	F *2+1	G *2+1
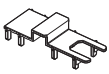		ST4X35		Fixed glass	ST4X10	

H *1
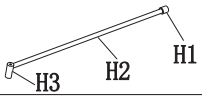

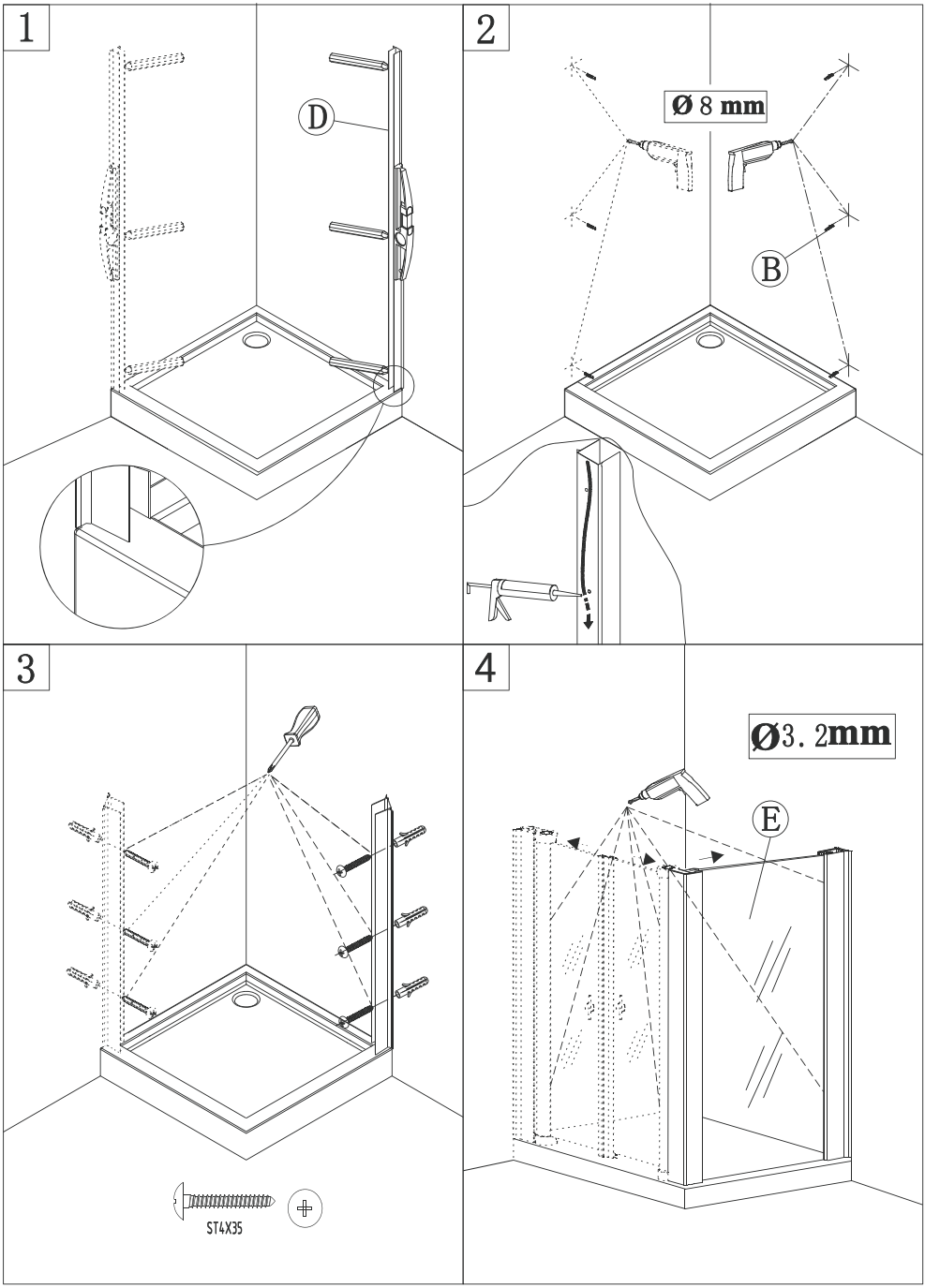
1
D
2
Ø 8 mm
B
3
ST4X35
4
Ø3. 2mm
E

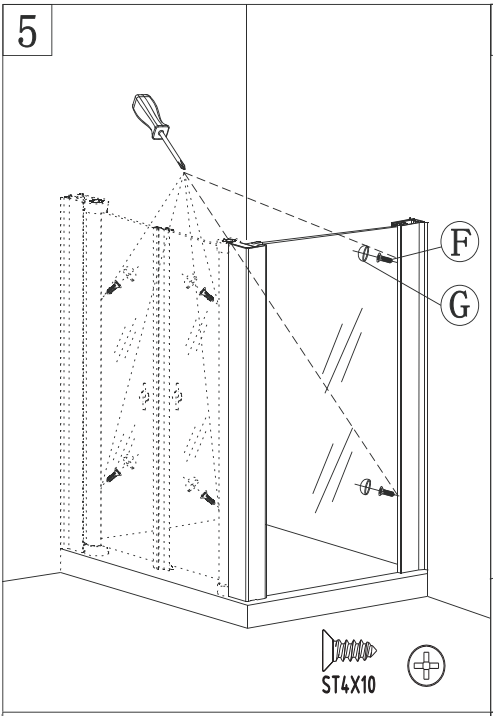
5
F
G
ST4X10

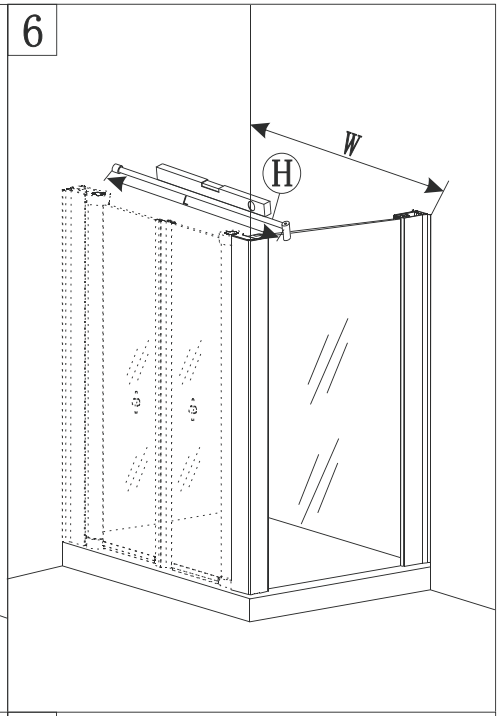
6
W
H

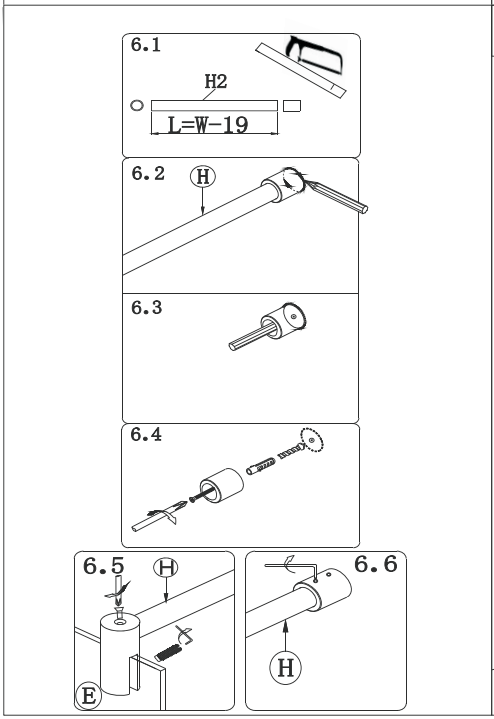
6.1
H2
L=W-19
6.2
H
6.3
6.4
6.5
H
E
6.6
H

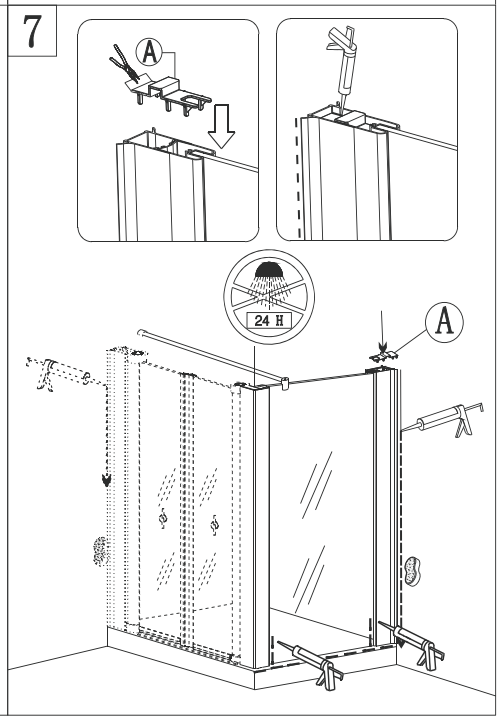
7
A
24 H
A